21.14.040 Manufacturing Park

Exhibit F

(A) Purpose. The purpose of the Manufacturing Park (MP) zone is to provide locations for existing and future manufacturing and industrial uses, particularly those that require significant areas for storage of materials and equipment (both indoors and outdoors), and that are better suited for locations outside of Downtown and Overlake due to site requirements, noise impacts, transportation needs, or other considerations. The intent of the Manufacturing Park zone is to allow manufacturing, research and development, light industry, wholesale, assembly and distribution businesses, and essential public facilities. Office and other secondary uses are limited to those that support these primary uses. Other uses such as day care centers, retail vehicle fuel sales, and technical colleges may be considered. Residential uses, except for secure community transition facilities, are not allowed.

(B) Maximum Development Yield.

	Base	Bonuses Available, and Quantity	Maximum
Floor area ratio (FAR)	0.25-0.5 (use dependent)	TDRs: 0.5	1.00
Height	4 stories	TDRs: 1 story	5 stories

Example of a 4-story building with FAR = 0.50

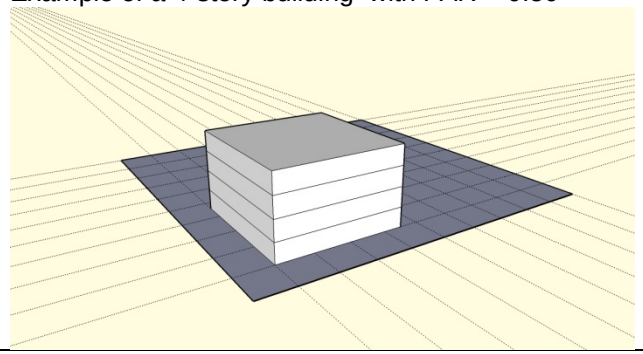

Example of 5-story building with FAR = 1.00

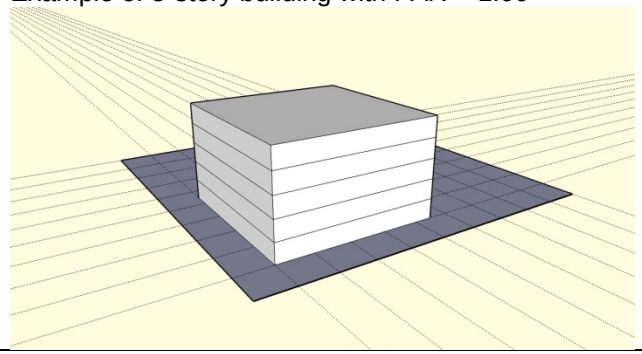

(C) Regulations Common to All Uses.

	Regulation	Standard	Exceptions
Minimum	Tract area (acres)	1.5	1. Regulation does not apply to: a. Unoccupied accessory utility facilities, or b. Building pad sites where the pad site and the property leased for parking, landscaping, or other purposes exceed the minimum tract area.
	Lot frontage (ft)	30	
	Setbacks Front and street Rear and side	 30 10	1. Side and rear setback distances may be modified to permit zero side and rear setbacks to accommodate joint wall construction and clustering of buildings. 2. Front setbacks may be modified from private streets and access corridors, provided front setbacks are maintained from all public streets. 3. Fences, landscaping, flagpoles, street furniture, transit shelters and slope stability structures are permitted in setback areas, provided that all other requirements are met; no other structures, and no accessory structures are permitted in setback areas.
	Landscaping	20 percent	
Maximum	Impervious surface area	80 percent	
	Height	Varies	1. Maximum height in shoreline area is 35 feet. This height limit is restricted to that portion of the building physically

	Regulation	Standard	Exceptions
			located within the shoreline jurisdiction. This height restriction does not apply to rock crushing equipment, asphalt and concrete batch plants, silos and other related equipment necessitated to meet environmental controls and structures housing manufacturing facilities which require more clear space than by a 35-foot height limit. The maximum height limit for these features shall be 90 feet. (SMP)
	FAR (Floor Area Ratio)	Varies	1. All legal lots are entitled to 10,000 square feet GFA without the use of TDRs provided that other site requirements can be met.

(D) Allowed Uses and Basic Development Standards. The following table contains the basic zoning regulations that apply to uses in the Manufacturing Park (MP) zone. To use the chart, read down the left-hand column titled "Use." When you have located the use that interests you, read across to find regulations that apply to that use. Uses are permitted unless otherwise specified in the Special Regulations column. Permitted uses may require land use permit approval. See RZC 21.76.020, Overview of the Development Process, for more information. Uses not listed are not permitted.

Section	Use	Maximums				Parking ratio: unit of measure (min. required, max. allowed)	Special Regulations
		Height (stories)		FAR			
		w/o TDRs	w/ TDRs	w/o TDRs	w/ TDRs		
General Sales or Services							
1	Automobile sales, service, or rental establishment	4	5	0.5	1.0	600 sq ft enclosed sales gfa (1.0, 1.0); and 2,500 sq ft open sales/rental display area (1.0, 1.0); and service bay (3.0, 3.0); and employee on maximum shift (1.0, 1.0)	1. Gasoline service requires conditional use permit. See RZC 21.76.070(K), Conditional Use Permit. 2. Shall not abut residential zone. 3. Rental uses operating in mixed-use developments are limited to eight rental vehicles at any given time in existing parking spaces; additional vehicles may be stored on-site in a building or elsewhere given submittal and approval by the Technical Committee of a vehicle storage plan. 4. Vehicle display area shall be outside of required parking and landscape areas. 5. Vehicles shall be stored on paved surfaces. 6. Advertising signs are not permitted on the outside of vehicles. Signs providing information about the vehicle, such as year, make, model, etc., may be displayed on the outside of or in the windows of vehicles. 7. Outdoor loudspeaker systems are prohibited. 8. Razor wire, chain link, and barbed wire fences prohibited on street or access frontage. 9. Vehicle repair shall be conducted indoors. 10. Auto and motorcycle repair uses may also allow sales, not to exceed 25 percent of the combined gross floor area of all uses. 11. Auto sales only permitted in conjunction with repair (see note 10 above), or as stand-alone businesses on properties with frontage on NE 90th Street between Willows Road and 152nd Avenue NE, NE 95th Street between Willows Road and 151st Avenue NE, and 151st Avenue NE between NE 90th Street and NE 95th Street.
2	Real estate services	4	5	0.5	1.0	1,000 sq ft gfa (2.0, 3.0)	1. Mini-warehouses/self-storage only.
3	Heavy consumer goods sales or service	4	4	0.25	0.25	1,000 sq ft gfa (2.0, 5.0)	1. Limited to repair and rental of goods, and membership wholesale/retail warehouses only.

Section	Use	Maximums				Parking ratio: unit of measure (min. required, max. allowed)	Special Regulations
		Height (stories)		FAR			
		w/o TDRs	w/ TDRs	w/o TDRs	w/ TDRs		
4	Durable consumer goods sales or service						2. For membership wholesale/retail warehouses: a. Permitted in SE Redmond only. b. A Development Agreement is required and must address the following policy areas of the Comprehensive Plan: land use and design, sustainable building practices, utilities, environmental issues, transportation, parks and open space, and community character. c. A neighborhood meeting is required prior to development agreement public hearing. d. Notice for neighborhood meeting shall be mailed at least 21 days in advance to all owners and tenants of properties within 1,000 feet of the site for which a complete application has been received by the City. Notice shall also be mailed to all homeowners' associations and residential properties adjacent to the specific MP zone in question. 3. Allowed on properties located along portions of Redmond Way, 180th Avenue NE and NE 68th Street as shown on the Redmond Zoning Map
5	Consumer goods sales or service, other than heavy or durable						
6	Professional services		5	0.5	1.0	1,000 sq ft gfa (2.0, 30)	1. Limited to a) research and development services, and b) other uses that support another permitted use in the MP zone.
7	Administrative services						1. Limited to corporate headquarters and regional offices associated with manufacturing or wholesale trade uses in an MP zone in Redmond.
8	Services to buildings and dwellings						
9	Full-service restaurant					Employee on maximum shift (1.0, 1.0)	1. Shall be located in multi-tenant building or a single-building in a multi-building, multi-tenant complex. 2. 50-person seating capacity, except when associated with manufacture of food or kindred products. In that case, maximum is 100-person seating capacity, so long as the seating area does not occupy more than 25% of combined gross floor area. The seating limit does not apply when the use is secondary to a winery or brewery, but the 25% limit continues to apply. 3. Hours of operation limited to 6am-10pm.
10	Cafeteria or limited service restaurant						
11	Bar or drinking place					1,000 sq ft gfa (10.0, 10.0)	
12	Caterer					1,000 sq ft gfa (2.0, 3.0)	
13	Food service contractor						

Section	Use	Maximums				Parking ratio: unit of measure (min. required, max. allowed)	Special Regulations
		Height (stories)		FAR			
		w/o TDRs	w/ TDRs	w/o TDRs	w/ TDRs		
14	Animal kennel/shelter	4	5	0.5	1.0	1,000 sq ft gfa (2.0, 3.0)	1. Boarding facilities must be located inside of a structure. 2. Outdoor runs or yards are allowed for the purpose of exercising animals. Runs/yards must be enclosed by eight-foot-high walls of sound-attenuating fencing or material such as masonry or concrete. 3. The planned maximum number of animals to be sheltered shall be indicated on the application. The maximum may be reduced if the applicant cannot demonstrate that the development has adequate lot size and facility design to accommodate the planned number of animals in a way that ensures neighboring residential properties will not be impacted with noise or odor problems.
Manufacturing and Wholesale Trade							
15	Manufacturing and wholesale trade	4	5	0.5	1.0	1,000 sq ft gfa (2.0, 3.0)	1. Asphalt and concrete batch plants shall have direct access to arterials. 2. Rock crushing equipment, asphalt, and concrete batch plants, silos and other related equipment may extend to a maximum height of 90 feet. 3. Outdoor processing operations follow a Type II review process. 4. Retail sales of goods manufactured on the premises, or accessory or secondary to the primary manufacturing and wholesale trade use, are permitted. Area devoted to retail sales shall not exceed the lesser of 10 percent of combined gross floor area or 1,000 square feet. 5. One caretaker residence per parcel is permitted as an accessory use, and shall not exceed 1,500 square feet.
Transportation, Communication, Information, and Utilities							
16	Rail transportation	4	5	0.5	1.0	1,000 sq ft gfa (2.0, 3.0)	
17	Road, ground passenger, and transit transportation						
18	Truck and freight transportation services						
19	Rapid charging station					Adequate to accommodate peak use	1. Shall not be located on a parcel that abuts a residential zone
20	Battery exchange station						
21	Postal services					1,000 sq ft gfa (2.0, 3.0)	
22	Heliport facility						1. Conditional use permit required. See RZC 21.76.070(K), Conditional Use Permit
23	Communications and information						
24	Large Satellite Dishes/Amateur Radio Tower	4	5	0.5	1.0	Adequate to accommodate peak use	See RZC 21.56, Wireless Communication Facilities

Section	Use	Maximums				Parking ratio: unit of measure (min. required, max. allowed)	Special Regulations
		Height (stories)		FAR			
		w/o TDRs	w/ TDRs	w/o TDRs	w/ TDRs		
25	Antenna Array and Base Station						A Conditional Use Permit may be required; see RZC 21.56, Wireless Communication Facilities for specific development requirements.
26	Antenna Support Structures						
27	Regional utilities						
28	Local utilities						
29	Solid waste transfer and recycling						
30	Incidental hazardous waste treatment and storage					1,000 sq ft gfa (2.0, 3.0)	1. Measures shall be taken in the construction of structures, design of storage areas, and design of delivery areas to prevent release of materials including those resulting from a "worst case" accident and including consideration of large storms where areas are not covered. 2. Hazardous materials shall not cause fumes, unpleasant odors, or harm to others in the course of normal handling. This shall not preclude the handling of materials with the use of approved filters, hoods, scrubbers, or other methods of removing odors or harm.
31	Primary hazardous waste treatment and storage						1. Conditional use permit required. See RZC 21.76.070(K), Conditional Use Permit 2. Measures shall be taken in the construction of structures, design of storage areas, and design of delivery areas to prevent release of materials including those resulting from a "worst case" accident and including consideration of large storms where areas are not covered. 3. Hazardous materials shall not cause fumes, unpleasant odors, or harm to others in the course of normal handling. This shall not preclude the handling of materials with the use of approved filters, hoods, scrubbers, or other methods of removing odors or harm.
Arts, Entertainment, and Recreation							
32	Natural and other recreational parks	4	5	0.5	1.0	1,000 sq ft gfa (2.0, 3.0)	
33	Amusement, sports or recreation establishment						1. Limited to fitness and athletic clubs only.
34	Adult entertainment facilities						1. Conditional use permit required. See RZC 21.76.070(K), Conditional Use Permit. 2. See RZC 21.18, Adult Entertainment.
Education, Public Administration, Health Care, and other Institutions							

Section	Use	Maximums				Parking ratio: unit of measure (min. required, max. allowed)	Special Regulations
		Height (stories)		FAR			
		w/o TDRs	w/ TDRs	w/o TDRs	w/ TDRs		
35	Technical, trade, and other specialty schools	4	5	0.5	1.0	Adequate to accommodate peak use	1. Conditional use permit required if capacity is greater than 150 full-time-equivalent students, where 15 credits per quarter considered full-time. See RZC 21.76.070(K), Conditional Use Permit. 2. The school shall allow for the efficient operation manufacturing uses. 3. The proposed site design and layout shall minimize the effects of existing manufacturing uses upon the proposal. Site design and layout should include adequate screening of noise, light, and view of adjacent and less aesthetic uses (such as a storage yard).
36	Secure community transition facility						1. See RZC 21.76.070(M), Essential Public Facilities.
37	Day care center					Employee on maximum shift (1.0, 1.0)	1. Play equipment shall be located no less than 10 feet from any property line. 2. Shall not be located closer than 300 feet from existing day care operation in residential zone.

Section	Use	Maximums				Parking ratio: unit of measure (min. required, max. allowed)	Special Regulations
		Height (stories)		FAR			
		w/o TDRs	w/ TDRs	w/o TDRs	w/ TDRs		
38	Religious institutions	4	5	0.5	1.0	Assembly uses: 1,000 sq ft gfa (10.0, 10.0), or number of fixed seats (0.2, 0.2) Other uses: 1,000 sq ft gfa (2.0, 3.0)	1. A seat is one fixed seat or 18 inches on a pew or bench or seven square feet in the general assembly area, including aisle space, but excluding stage, podium, lobby, and space for musical instruments. 2. Storage locations of buses/vans over 10,000 gvw shall be shown on a plan and screened from neighboring properties or right-of-way. 3. Decorative fencing or decorative walls and landscaping on side or back lots are required when necessary to prevent visual impacts on neighboring properties and public shoreline areas. 4. Off-site parking in residential zones is allowed only with a shared parking agreement with an existing institutional use, such as a school. 5. A traffic mitigation plan is required. The plan shall address traffic control, parking management (including mitigation of overflow parking into adjoining residential areas), and traffic movement to the arterial street system. 6. Steeples, bell towers, crosses or other symbolic religious icons mounted on the rooftop may exceed the maximum shoreline building height by 15 feet. (SMP) 7. Maximum height for separate structures on-site such as bell towers, crosses, statuary, or other symbolic religious icons is 60 feet. 8. Institutions with a seating capacity greater than 750 seats shall: require a traffic study or other documentation deemed suitable by the Technical Committee that demonstrates that there will be no significant adverse impacts to traffic operations on the adjacent street system; have a maximum building height of 5 stories; be setback 5 additional feet for every one foot in building height over 45 feet exclusive of rooftop symbolic icons; not contain accessory or stand-alone parking facilities; not contain primary or secondary schools; and shall require a conditional use permit. See RZC 21.76.070(K), Conditional Use Permit. 9. Institutions with a seating capacity greater than 7,500 seats shall be located adjacent to at least one collector, minor, or principal arterial.
Construction-related Businesses							
39	Construction-related businesses	4	5	0.5	1.0	1000 sq ft gfa (2.0, 3.0)	

Other							
40	Water enjoyment use	45 feet	45 feet	0.5	1.0	1,000 sq ft gfa (2.0, 3.0)	1. Allowed only in the shoreline jurisdiction of Bear Creek, downstream of Avondale Road on Union Hill Road, Redmond Way or SR 520, and the shoreline jurisdiction of the Sammamish River at NE 85th Street and NE 90th Street. (SMP) 2. Maximum height is 45 feet. (SMP)
41	Kiosk	1	1				1. Limited to uses associated with water enjoyment within the shoreline jurisdictions of Bear Creek and the Sammamish River. 2. Shall not locate in required parking, landscaping, or drive aisle area, or any area that would impede emergency access. 3. Shall not reduce or interfere with functional use of walkway or plaza to below standards of Americans with Disabilities Act. 4. Structures shall be secured to prevent tipping and endangering public safety. 5. Maximum size is six feet wide by ten feet long. 6. Administrative design review required for structures.
42	Vending cart						
43	Drive-up stand					1,000 sq ft gfa (2.0, 3.0)	1. Limited to uses associated with water enjoyment within the shoreline jurisdictions of Bear Creek and the Sammamish River. 2. Shall not locate in required parking, landscaping, or drive aisle area, or any area that would impede emergency access. 3. Shall not reduce or interfere with functional use of walkway or plaza to below standards of Americans with Disabilities Act. 4. Structures shall be secured to prevent tipping and endangering public safety. 5. Maximum size is six feet wide by ten feet long. 6. Administrative design review required for structures. 7. Must submit circulation plan addressing queuing.

(E) Cross-references. For information on how to measure various site requirements like height and setbacks, see RZC 21.16.010, Site Requirements How-To.
See RZC 21.16.020, Other Applicable Regulations, for information on other standards that may apply to you.